Platet S/90

Diseño / *Design*:
Christophe Mathieu / 2026

Tipología: Suspensión
Typology: Pendant lamp

Ambiente: Interior
Environment: Indoor

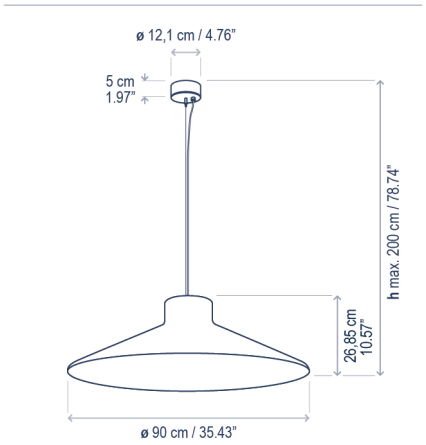



Descripción técnica / *Technical description*:

Peso Neto: 0,00 kg
Net Weight: 0,00 kg

1 Caja/*Box* | 00 x 00 x 00 cm | 0,00 m³
Peso bruto / *Gross Weight*: 0,00 kg

Materiales: Aluminio
Materials: Aluminum

Estructura Negro Ébano
Ebony Black Structure

Interior pantalla: Blanco Perla (RAL 1013)
Shade interior: Oyster White (RAL 1013)

Personalizable
Customizable

Temperaturas de color adicionales disponibles bajo demanda.
Additional CCT available upon request.

Certificaciones
Certifications

Descripción lámpara / *Lamps description*:

220-240V 50/60Hz | IP20 | TRIAC | 21,6 W LED / CRI: 90 / 2700K | 3000K*
25,4 W Consumo total / *Total power consumption*

Ref	Acabados / *Finishing*	Lumens
139P03C27398	Regulable Triac - Pantalla Negro Ébano *Dimmable Triac - Ebony Black Shade*	2316
139P03C27399	Regulable Triac - Pantalla Gris Oliva *Dimmable Triac - Olive Grey Shade*	2316
139P03C27400	Regulable Triac - Pantalla Teja *Dimmable Triac - Terracotta Shade*	2316
139P03C27401	Regulable Triac - Pantalla Gris Guijarro *Dimmable Triac - Pebble Grey Shade*	2316
139P03C27402	Regulable Triac - Pantalla Marrón *Dimmable Triac - Brown Shade*	2316
139P03C30398*	Regulable Triac - Pantalla Negro Ébano *Dimmable Triac - Ebony Black Shade*	2347
139P03C30399*	Regulable Triac - Pantalla Gris Oliva *Dimmable Triac - Olive Grey Shade*	2347
139P03C30400*	Regulable Triac - Pantalla Teja *Dimmable Triac - Terracotta Shade*	2347
139P03C30401*	Regulable Triac - Pantalla Gris Guijarro *Dimmable Triac - Pebble Grey Shade*	2347
139P03C30402*	Regulable Triac - Pantalla Marrón *Dimmable Triac - Brown Shade*	2347

Descripción lámpara / *Lamps description*:

120-277V 50/60Hz | IP20 | DALI | 21,6 W LED / CRI: 90 / 2700K | 3000K*
22,6 W Consumo total / *Total power consumption*

Ref	Acabados / *Finishing*	Lumens
139P03D27398	Regulable Dali - Pantalla Negro Ébano *Dimmable Dali - Ebony Black Shade*	2316
139P03D27399	Regulable Dali - Pantalla Gris Oliva *Dimmable Dali - Olive Grey Shade*	2316
139P03D27400	Regulable Dali - Pantalla Teja *Dimmable Dali - Terracotta Shade*	2316
139P03D27401	Regulable Dali - Pantalla Gris Guijarro *Dimmable Dali - Pebble Grey Shade*	2316
139P03D27402	Regulable Dali - Pantalla Marrón *Dimmable Dali - Brown Shade*	2316
139P03D30398*	Regulable Dali - Pantalla Negro Ébano *Dimmable Dali - Ebony Black Shade*	2347
139P03D30399*	Regulable Dali - Pantalla Gris Oliva *Dimmable Dali - Olive Grey Shade*	2347
139P03D30400*	Regulable Dali - Pantalla Teja *Dimmable Dali - Terracotta Shade*	2347
139P03D30401*	Regulable Dali - Pantalla Gris Guijarro *Dimmable Dali - Pebble Grey Shade*	2347
139P03D30402*	Regulable Dali - Pantalla Marrón *Dimmable Dali - Brown Shade*	2347

bover
Avda. Catalunya 173, Polígon Ind. Sud - 08440 Cardedeu, Barcelona, Spain - T.+34 938 713 152 - F.+34 938 462 089 - info@bover.es - www.bover.es

Platet S/90

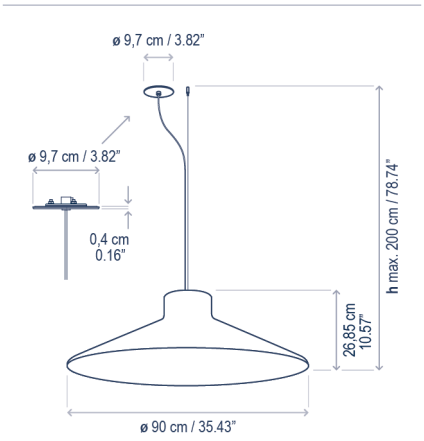



Descripción técnica / *Technical description*:

Peso Neto: 0,00 kg
Net Weight: 0,00 kg

1 Caja/*Box* | 00 x 00 x 00 cm | 0,00 m³
Peso bruto / *Gross Weight*: 0,00 kg

Materiales: Aluminio
Materials: Aluminum

Estructura Negro Ébano
Ebony Black Structure

Interior pantalla: Blanco Perla (RAL 1013)
Shade interior: Oyster White (RAL 1013)

Personalizable
Customizable

Temperaturas de color adicionales disponibles bajo demanda.
Additional CCT available upon request.

Certificaciones
Certifications

Descripción lámpara (Driver remoto) / *Lamps description (Remote driver)*:

220-240V 50/60Hz | IP20 | TRIAC | 21,6W LED / CRI: 90 / 2700K | 3000K*
24,78 W Consumo total / *Total power consumption*

Ref	Acabados / *Finishing*	Lumens
139P06C27398	Regulable Triac - Pantalla Negro Ébano *Dimmable Triac - Ebony Black Shade*	2316
139P06C27399	Regulable Triac - Pantalla Gris Oliva *Dimmable Triac - Olive Grey Shade*	2316
139P06C27400	Regulable Triac - Pantalla Teja *Dimmable Triac - Terracotta Shade*	2316
139P06C27401	Regulable Triac - Pantalla Gris Guijarro *Dimmable Triac - Pebble Grey Shade*	2316
139P06C27402	Regulable Triac - Pantalla Marrón *Dimmable Triac - Brown Shade*	2316
139P06C30398*	Regulable Triac - Pantalla Negro Ébano *Dimmable Triac - Ebony Black Shade*	2347
139P06C30399*	Regulable Triac - Pantalla Gris Oliva *Dimmable Triac - Olive Grey Shade*	2347
139P06C30400*	Regulable Triac - Pantalla Teja *Dimmable Triac - Terracotta Shade*	2347
139P06C30401*	Regulable Triac - Pantalla Gris Guijarro *Dimmable Triac - Pebble Grey Shade*	2347
139P06C30402*	Regulable Triac - Pantalla Marrón *Dimmable Triac - Brown Shade*	2347

Descripción lámpara (Driver remoto) / *Lamps description (Remote driver)*:

120-277V 50/60Hz | IP20 | DALI | 21,6 W LED / CRI: 90 / 2700K | 3000K*
22,6 W Consumo total / *Total power consumption*

Ref	Acabados / *Finishing*	Lumens
139P06D27398	Regulable Dali - Pantalla Negro Ébano *Dimmable Dali - Ebony Black Shade*	2316
139P06D27399	Regulable Dali - Pantalla Gris Oliva *Dimmable Dali - Olive Grey Shade*	2316
139P06D27400	Regulable Dali - Pantalla Teja *Dimmable Dali - Terracotta Shade*	2316
139P06D27401	Regulable Dali - Pantalla Gris Guijarro *Dimmable Dali - Pebble Grey Shade*	2316
139P06D27402	Regulable Dali - Pantalla Marrón *Dimmable Dali - Brown Shade*	2316
139P06D30398*	Regulable Dali - Pantalla Negro Ébano *Dimmable Dali - Ebony Black Shade*	2347
139P06D30399*	Regulable Dali - Pantalla Gris Oliva *Dimmable Dali - Olive Grey Shade*	2347
139P06D30400*	Regulable Dali - Pantalla Teja *Dimmable Dali - Terracotta Shade*	2347
139P06D30401*	Regulable Dali - Pantalla Gris Guijarro *Dimmable Dali - Pebble Grey Shade*	2347
139P06D30402*	Regulable Dali - Pantalla Marrón *Dimmable Dali - Brown Shade*	2347

Acabados
Finishing

Negro Ebano *Ebony Black*
Gris Oliva *Olive Grey*
Teja *Terracotta*
Gris Guijarro *Pebble Grey*
Marrón Grafito *Graphite Brown*

bover
Avda. Catalunya 173, Polígon Ind. Sud - 08440 Cardedeu, Barcelona, Spain - T.+34 938 713 152 - F.+34 938 462 089 - info@bover.es - www.bover.es