Platet S/60

Diseño / *Design*:
Christophe Mathieu / 2026

Tipología: Suspensión
Typology: Pendant lamp

Ambiente: Interior
Environment: Indoor

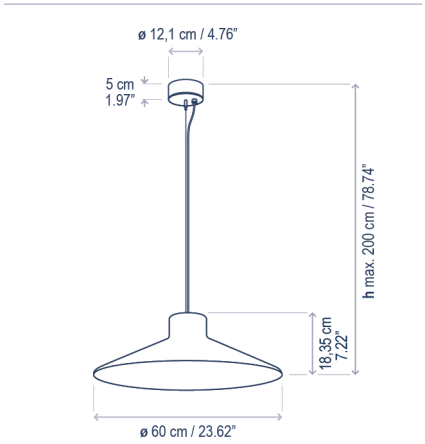



Descripción técnica / *Technical description*:

Peso Neto: 0,00 kg
Net Weight: 0,00 kg

1 Caja/*Box* | 00 x 00 x 00 cm | 0,00 m³
Peso bruto / *Gross Weight*: 0,00 kg

Materiales: Aluminio
Materials: Aluminum

Estructura Negro Ébano
Ebony Black Structure

Interior pantalla: Blanco Perla (RAL 1013)
Shade interior: Oyster White (RAL 1013)

Personalizable
Customizable

Temperaturas de color adicionales disponibles bajo demanda.
Additional CCT available upon request.

Certificaciones
Certifications

Descripción lámpara / *Lamps description*:

220-240V 50/60Hz | IP20 | TRIAC | 10,8 W LED / CRI: 90 / 2700K | 3000K*
14 W Consumo total / *Total power consumption* | A↑G D

Ref	Acabados / *Finishing*	Lumens
139P02C27398	Regulable Triac - Pantalla Negro Ébano *Dimmable Triac - Ebony Black Shade*	1169
139P02C27399	Regulable Triac - Pantalla Gris Oliva *Dimmable Triac - Olive Grey Shade*	1169
139P02C27400	Regulable Triac - Pantalla Teja *Dimmable Triac - Terracotta Shade*	1169
139P02C27401	Regulable Triac - Pantalla Gris Guijarro *Dimmable Triac - Pebble Grey Shade*	1169
139P02C27402	Regulable Triac - Pantalla Marrón *Dimmable Triac - Brown Shade*	1169
139P02C30398*	Regulable Triac - Pantalla Negro Ébano *Dimmable Triac - Ebony Black Shade*	1185
139P02C30399*	Regulable Triac - Pantalla Gris Oliva *Dimmable Triac - Olive Grey Shade*	1185
139P02C30400*	Regulable Triac - Pantalla Teja *Dimmable Triac - Terracotta Shade*	1185
139P02C30401*	Regulable Triac - Pantalla Gris Guijarro *Dimmable Triac - Pebble Grey Shade*	1185
139P02C30402*	Regulable Triac - Pantalla Marrón *Dimmable Triac - Brown Shade*	1185

Descripción lámpara / *Lamps description*:

120-277V 50/60Hz | IP20 | DALI | 10,8 W LED / CRI: 90 / 2700K | 3000K*
11,8 W Consumo total / *Total power consumption* | A↑G D

Ref	Acabados / *Finishing*	Lumens
139P02D27398	Regulable Dali - Pantalla Negro Ébano *Dimmable Dali - Ebony Black Shade*	1169
139P02D27399	Regulable Dali - Pantalla Gris Oliva *Dimmable Dali - Olive Grey Shade*	1169
139P02D27400	Regulable Dali - Pantalla Teja *Dimmable Dali - Terracotta Shade*	1169
139P02D27401	Regulable Dali - Pantalla Gris Guijarro *Dimmable Dali - Pebble Grey Shade*	1169
139P02D27402	Regulable Dali - Pantalla Marrón *Dimmable Dali - Brown Shade*	1169
139P02D30398*	Regulable Dali - Pantalla Negro Ébano *Dimmable Dali - Ebony Black Shade*	1185
139P02D30399*	Regulable Dali - Pantalla Gris Oliva *Dimmable Dali - Olive Grey Shade*	1185
139P02D30400*	Regulable Dali - Pantalla Teja *Dimmable Dali - Terracotta Shade*	1185
139P02D30401*	Regulable Dali - Pantalla Gris Guijarro *Dimmable Dali - Pebble Grey Shade*	1185
139P02D30402*	Regulable Dali - Pantalla Marrón *Dimmable Dali - Brown Shade*	1185

bover
Avda. Catalunya 173, Polígon Ind. Sud - 08440 Cardedeu, Barcelona, Spain - T.+34 938 713 152 - F.+34 938 462 089 - info@bover.es - www.bover.es

Platet S/60

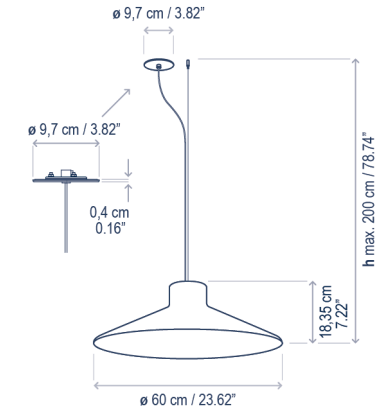



Descripción técnica / *Technical description*:

Peso Neto: 0,00 kg
Net Weight: 0,00 kg

1 Caja/*Box* | 00 x 00 x 00 cm | 0,00 m³
Peso bruto / *Gross Weight*: 0,00 kg

Materiales: Aluminio
Materials: Aluminum

Estructura Negro Ébano
Ebony Black Structure

Interior pantalla: Blanco Perla (RAL 1013)
Shade interior: Oyster White (RAL 1013)

Personalizable
Customizable

Temperaturas de color adicionales disponibles bajo demanda.
Additional CCT available upon request.

Certificaciones
Certifications

Descripción lámpara (Driver remoto) / *Lamps description (Remote driver)*:

220-240V 50/60Hz | IP20 | TRIAC | 10,8 W LED / CRI: 90 / 2700K | 3000K*
12,02 W Consumo total / *Total power consumption* | A D G

Ref	Acabados / *Finishing*	Lumens
139P05C27398	Regulable Triac - Pantalla Negro Ébano *Dimmable Triac - Ebony Black Shade*	1169
139P05C27399	Regulable Triac - Pantalla Gris Oliva *Dimmable Triac - Olive Grey Shade*	1169
139P05C27400	Regulable Triac - Pantalla Teja *Dimmable Triac - Terracotta Shade*	1169
139P05C27401	Regulable Triac - Pantalla Gris Guijarro *Dimmable Triac - Pebble Grey Shade*	1169
139P05C27402	Regulable Triac - Pantalla Marrón *Dimmable Triac - Brown Shade*	1169
139P05C30398*	Regulable Triac - Pantalla Negro Ébano *Dimmable Triac - Ebony Black Shade*	1185
139P05C30399*	Regulable Triac - Pantalla Gris Oliva *Dimmable Triac - Olive Grey Shade*	1185
139P05C30400*	Regulable Triac - Pantalla Teja *Dimmable Triac - Terracotta Shade*	1185
139P05C30401*	Regulable Triac - Pantalla Gris Guijarro *Dimmable Triac - Pebble Grey Shade*	1185
139P05C30402*	Regulable Triac - Pantalla Marrón *Dimmable Triac - Brown Shade*	1185

Descripción lámpara (Driver remoto) / *Lamps description (Remote driver)*:

120-277V 50/60Hz | IP20 | DALI | 10,8 W LED / CRI: 90 / 2700K | 3000K*
12,98 W Consumo total / *Total power consumption* | A D G

Ref	Acabados / *Finishing*	Lumens
139P05D27398	Regulable Dali - Pantalla Negro Ébano *Dimmable Dali - Ebony Black Shade*	1169
139P05D27399	Regulable Dali - Pantalla Gris Oliva *Dimmable Dali - Olive Grey Shade*	1169
139P05D27400	Regulable Dali - Pantalla Teja *Dimmable Dali - Terracotta Shade*	1169
139P05D27401	Regulable Dali - Pantalla Gris Guijarro *Dimmable Dali - Pebble Grey Shade*	1169
139P05D27402	Regulable Dali - Pantalla Marrón *Dimmable Dali - Brown Shade*	1169
139P05D30398*	Regulable Dali - Pantalla Negro Ébano *Dimmable Dali - Ebony Black Shade*	1185
139P05D30399*	Regulable Dali - Pantalla Gris Oliva *Dimmable Dali - Olive Grey Shade*	1185
139P05D30400*	Regulable Dali - Pantalla Teja *Dimmable Dali - Terracotta Shade*	1185
139P05D30401*	Regulable Dali - Pantalla Gris Guijarro *Dimmable Dali - Pebble Grey Shade*	1185
139P05D30402*	Regulable Dali - Pantalla Marrón *Dimmable Dali - Brown Shade*	1185

Acabados
Finishing

Negro Ebano *Ebony Black*
Gris Oliva *Olive Grey*
Teja *Terracotta*
Gris Guijarro *Pebble Grey*
Marrón Grafito *Graphite Brown*

bover
Avda. Catalunya 173, Polígon Ind. Sud - 08440 Cardedeu, Barcelona, Spain - T.+34 938 713 152 - F.+34 938 462 089 - info@bover.es - www.bover.es